MINI Compression Fittings

TL SERIES

Product features

- The Mini Compression Fittings
- The Mini Compression Fittings are used in Nylon Tube extensively and are able to bear high pressure

Speciality

Fluid	Air (no other gases or liquids)
Operating Pressure	0～1.0 MPa (150psi)
Max Pressure	-100Kpa (-29.5 in ·Hg)
Operating Temperature	-60℃(32-140 ℉)
Applicable Tube	Polyurethane and Nylon

Dimension

TC — Two Touch Fitting

04 — Tube Dia Code

Code	O.D	I.D
04	Φ04	Φ2.5
06	Φ06	Φ4
08	Φ08	Φ5.5

-

01 — Thread Size

Code	Metric Thread Size
M3	M3x05
M5	M5X0.8
M6	M6X1
01	G1/8

Dimension

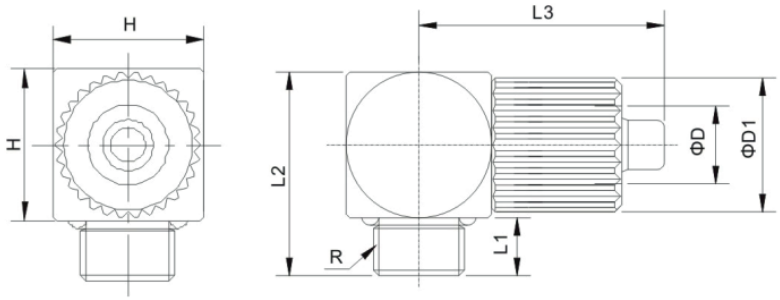

MODEL	ΦD	R	H	L1	L2	L3	ΦD1
TL03-M5	3	M5X0.8	8	3	11.5	12.2	6
TL04-M3	4	M3X0.5	8	3	10.5	13.5	7.5
TL04-M5	4	M5X0.8	8	3.5	11.5	13.5	7.5
TL04-M6	4	M6X1.0	10	4	14	14.5	7.5
TL04-G01	4	G1/8	14	5.5	19.5	16.5	7.5
TL06-M5	6	M5X0.8	10	3.5	13.5	17.3	9.5
TL06-M6	6	M6X1.0	10	4	14	17.3	9.5
TL06-G01	6	G1/8	14	5.5	19.5	19.3	9.5